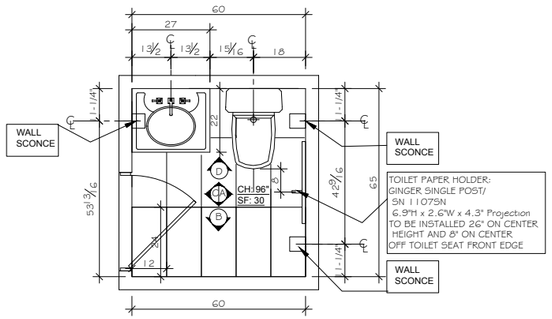

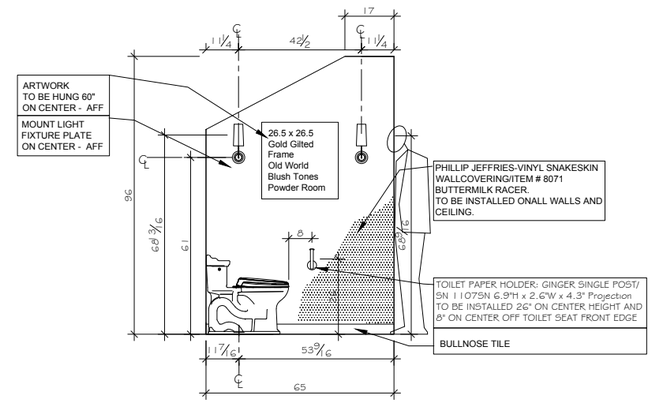

A ELEVATION

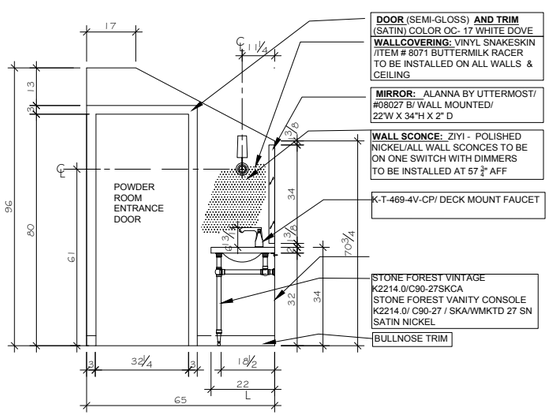

C ELEVATION

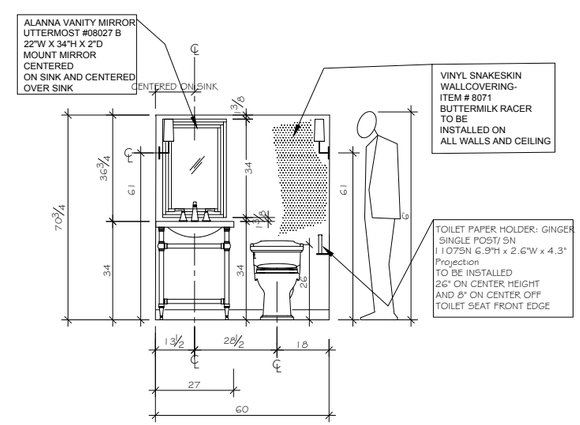

D ELEVATION
POWDER ROOM

NO.	DESCRIPTION	BY/DATE

SHEET TITLE: POWDER ROOM PLAN

PROJECT DESCRIPTION: ENGAGED FOR IMPACT

DRAWINGS PROVIDED BY:

DATE: 2019

SCALE: 1/2" = 1'-0"

SHEET: 5