FLOOR:
ELEMENTAL CANVAS SERIES :
*COOL GRAY MOSAIC
FIELD TILE 1" X 3"
GROUT: CUSTOM PRISM
OYSTER GRAY
* LAY TILE GROUT LINE, LINING IT
UP WITH THE 12" X 24" FEILD TILE

SHOWER BENCH:
W32-7/16" X D15" X H18"
SEAT TO BE REMNANT SLAB FROM
KITCHEN COUNTER TOP:
S-MODERN CONCRETE V505-2R
VADARA- 2CM QUARTZ SLAB

SHOWER CURB :
*** H 4-1/2" X W4-1/2"**
* FIELD TILE: 12" X 24"

TEMPERED GLASS
SHOWER DOORS:
* 3/8" THICKNESS
* FINISH: SATIN NICKEL
* GLASS COLOR: OPT WHITE
* GLASS DOOR SIZES: TBD

FIELD TILE:
* 12" X 24" ELEMENTAL CANVAS :
* COOL GRAY PORCELAIN
GROUT:
* CUSTOM PRISM OYSTER GRAY
TILE LAYOUT:
* LAY FIRST 12' X 24" AGAINST
CURB_ON CENTER

NICHE:
* FOR DETAILS SEE
PAGE 2B/ELEVATION B

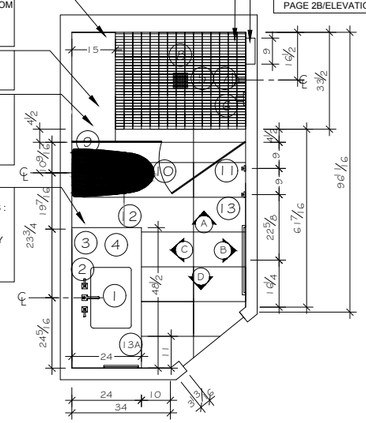

FLOOR PLAN
1/4" = 1'-0"

FIELD TILE:
* 12" X 24" ELEMENTAL CANVAS :
* COOL GRAY PORCELAIN
GROUT:
* CUSTOM PRISM OYSTER GRAY
TILE LAYOUT:
* LINEAR SET- 24" CENTERED ON WALL
* TILE TO BE CUT AT CEILING HEIGHT

ACCENT TILE:
* 1" X 3" SONOMA STONE
* QUADRATA TEXTURED LIMESTONE
GROUT:
* CUSTOM PRISM OYSTER GRAY
TILE LAYOUT:
* FULL 1" X 3" TILE CENTERED
ON WALL AT SPECIFIED HEIGHT AS
SHOWN IN ELEVATION

TOP of BUILT-IN BENCH:
* REMNANT SLAB-TBD -AS PER
DESIGNER

BUILT - IN BENCH:
* FEILD TILE ON BOXED
* REMNANT SLAB ON SEAT

CURB: H 4-1/2" X W 4-1/2"
FIELD TILE:
* 12" X 24" ELEMENTAL CANVAS :
* COOL GRAY PORCELAIN
GROUT:
* CUSTOM PRISM OYSTER GRAY
TILE LAYOUT:
* LINEAR SET- 24" CENTERED ON WALL
* FULL TILE (12" X 24")TO BE CENTERED
ON WALL
* START THE FULL TILE LENGTH
OF 24" AFF

SHOWER HEAD:
MOUNTED ON WALL

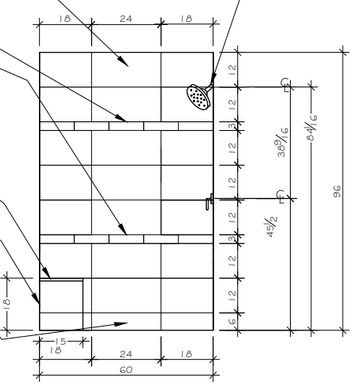

A ELEVATION
1/2" = 1'-0"

FIELD TILE:
*1/2" X 24" ELEMENTAL CANVAS :
*COOL GRAY PORCELAIN
GROUT:
* CUSTOM PRISM OYSTER GRAY
TILE LAYOUT:
* LINEAR SET- 24" CENTERED ON WALL
*TILE TO BE CUT AT CEILING HEIGHT

ACCENT TILE:
* 1" X 3" SONOMA STONE
* QUADRATA TEXTURED LIMESTONE
GROUT:
* CUSTOM PRISM OYSTER GRAY
TILE LAYOUT:
*FULL 1" X 3" TILE CENTERED
ON WALL AT SPECIFIED HEIGHT AS
SHOWN IN ELEVATION

NICHE :
*ACCENT TILE- 3" X 12" SONOMA STONE-
QUADRATA TEXTURED LIMESTONE
NICHE SHELF:
GROUT:
* CUSTOM PRISM OYSTER GRAY
SIDES OF NICHE:
* ACCENT TILE WITH MITERED EDGES
* TILE IS THROUGH BODY
BACK OF NICHE:
* ACCENT TILE
SHELF:
*1/4" - 3/4" THICKNESS/TO BE CONFIRMED
WITH CONTRACTOR AND DESIGNER

ELEMENTAL CANVAS :
* COOL GRAY PORCELAIN
FIELD TILE 12 X 24
GROUT: CUSTOM PRISM OYSTER GRAY
TILE LAYOUT:
* TILE TO BE CENTERED ON WALL
WITHIN THE 33" ALLOTED FOR THE
SHOWER AREA
* FIRST TILE TO BEGIN AFF

SHOWERHEAD:
*CENTER ON WALL
*SANTEC BAROSA SN: 70854875

SCHLUTER:
*TRENDLINE TSBG
* USE TO FINISH EDGE ON BOTH SIDES

HANSGROHE SHOWER VALVE TRIM:
*15724821 / BRUSHED NICKEL

ROBE AND TOWEL HOOKS:
* PLACEMENT : HT. 70"
ON CENTER
* 9" FROM GLASS DOOR AND 9" APART

PAINT:
* PRIMER, COLOR AND FINISH
TBD BY DESIGNER

TOWEL BAR:
* ITEM #2461MC
* TO BE HUNG 48" AFF

SHOWER CURB:
FIELD TILE:
*1/2" X 24" ELEMENTAL CANVAS :
*COOL GRAY PORCELAIN
GROUT:
* CUSTOM PRISM OYSTER GRAY
TILE LAYOUT:
* LINEAR SET- 24" CENTERED
ON WALL
*

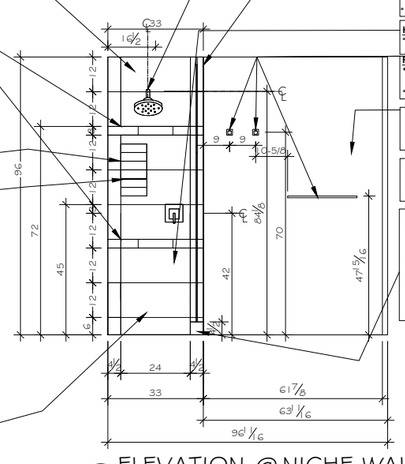

B ELEVATION @ NICHE WALL
1/2" = 1'-0"

LIGHTING:
LIBBY LANGDON FOR
CRYSTORAMA
GRAYSON/4 LIGHT /
POLISHED NICKEL/

MIRROR - CUSTOM
FRAMED W/BEVELED
GLASS:
FRAME FINISH: MECCA/
QTR SAWN OAK/
PORCH SWG BRU SEPIA
LOCATION:
MIRROR TO BE CENTERED
ON COUNTERTOP

MEDICINE CABINET:
ROBERN/R3 SERIES
MODEL #: RC1626D4FB1

FAUCET: SANTEC
BAROSA-SATIN
NICKEL-2420MC75

SINK: WHITE LADENA
K2214.0:LGPS

COUNTER TOP: ANS
REMNANT FROM KITCHEN
ISLAND-CALACATTA GOLD

VANITY:
FROM KITCHENS BY ROSS
SEMI/CUSTOM CABINETRY
FINISH:
MECCA/QTR SAWN OAK/
PORCH SWG BRU SEPIA

PULLS: SCHAUB AND CO.
POSITANO SATIN NICKEL/
CLEAR (6.299")- #317-15-CL

TP HOLDER :#2465MC
SANTEC/BAROSA DESIGNER
SERIES
TO BE MOUNTED ON VANITY
SIDE @ 26" ON CENTER AFF
AND 8-12" FROM RIM OF TOILET

3/8" LOW IRON ULTRA CLEAR
TEMPERED GLASS SHOWER
DOORS:
TBD BY DESIGNER/
CONTRACTOR

ACCENT TILE: QUA/NS312-
MARKET COLLECTION
SONOMA STONE-QUADRATA
TEXTURED LIMESTONE 3" X 12"
GROUT: CUSTOM-PRISM
OYSTER GRAY

BENCH MATERIAL:
SEAT TOP : SAME AS GUEST
BATH VANITY COUNTER TOP
BOX AREA: 12" X 24" TILE:
EPC PROYECCION
SERIES/CENIZ MATT.
GROUT: CUSTOM-PRISM
OYSTER GRAY GROUT

BENCH: BOXED SEAT/BENCH

WALL TILE:
PLACEMENT: FIRST TILE TO
BE CENTERED INSIDE
SHOWER AREA/REFER TO
ELEVATION D
TILE: 12" X 24" TILE: EPC
PROYECCION SERIES/CENIZ
MATT
GROUT: CUSTOM-PRISM
OYSTER GRAY GROUT

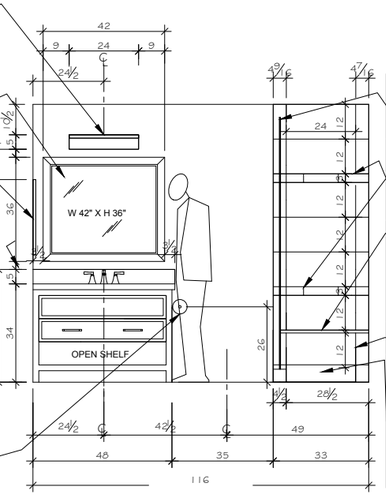

C ELEVATION
1/2" = 1'-0"

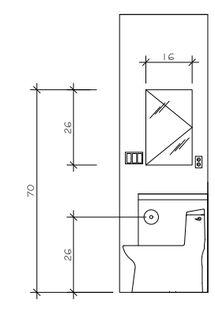

D ELEVATION
1/2" - 1'-0"

NO.	DESCRIPTION	BY/DATE

SHEET TITLE:
GUEST BATH FLOOR PLAN
AND ELEVATIONS

PROJECT DESCRIPTION:
ENGAGED FOR IMPACT

DRAWINGS PROVIDED BY:

DATE:
2019

SCALE:
as noted

SHEET:
6