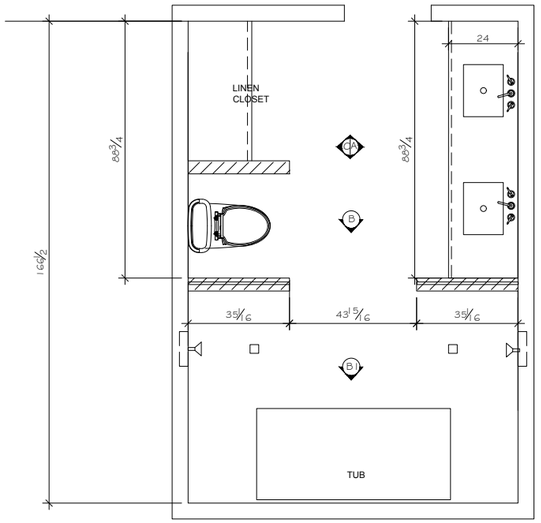

MASTER BATHROOM OPTION 1

1/4" = 1'-0"

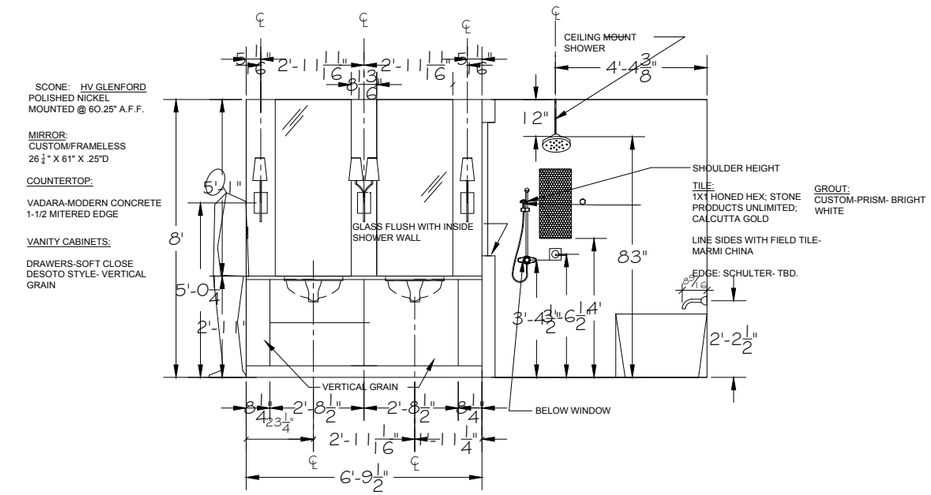

A VANITY ELEVATION OPTION 1

1/2" = 1'-0"

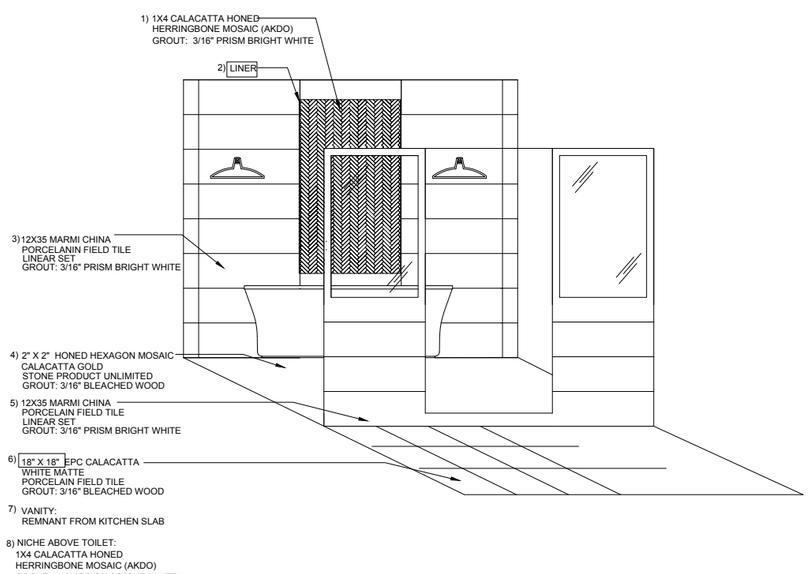

B 3D @ MASTER BATH

NO SCALE

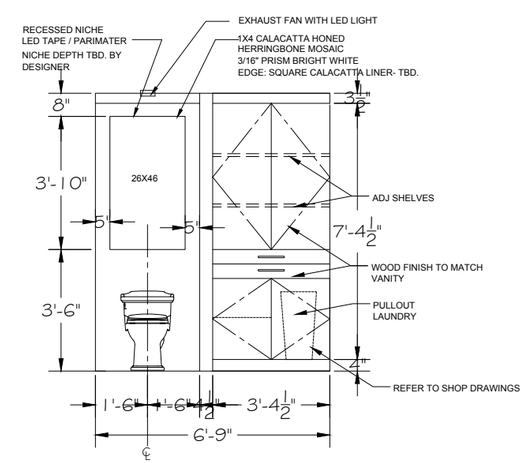

C ELEVS @ MASTER BATH

1/2" = 1'-0"

NO.	DESCRIPTION	BY/DATE

SHEET TITLE: MASTER BATH FLOOR PLAN, ELEVATIONS & 3D

PROJECT DESCRIPTION: ENGAGED FOR IMPACT

DRAWINGS PROVIDED BY:

DATE: 2019

SCALE: as noted

SHEET: 7